ME0201014201
0JWT. 301. 246

REV A | SHEET 1 OF 1

THE SIZES INDICATED ARE METRIC SIZE(mm).
图中所标尺寸为米制尺寸.mm

5

8BL1200-28T13

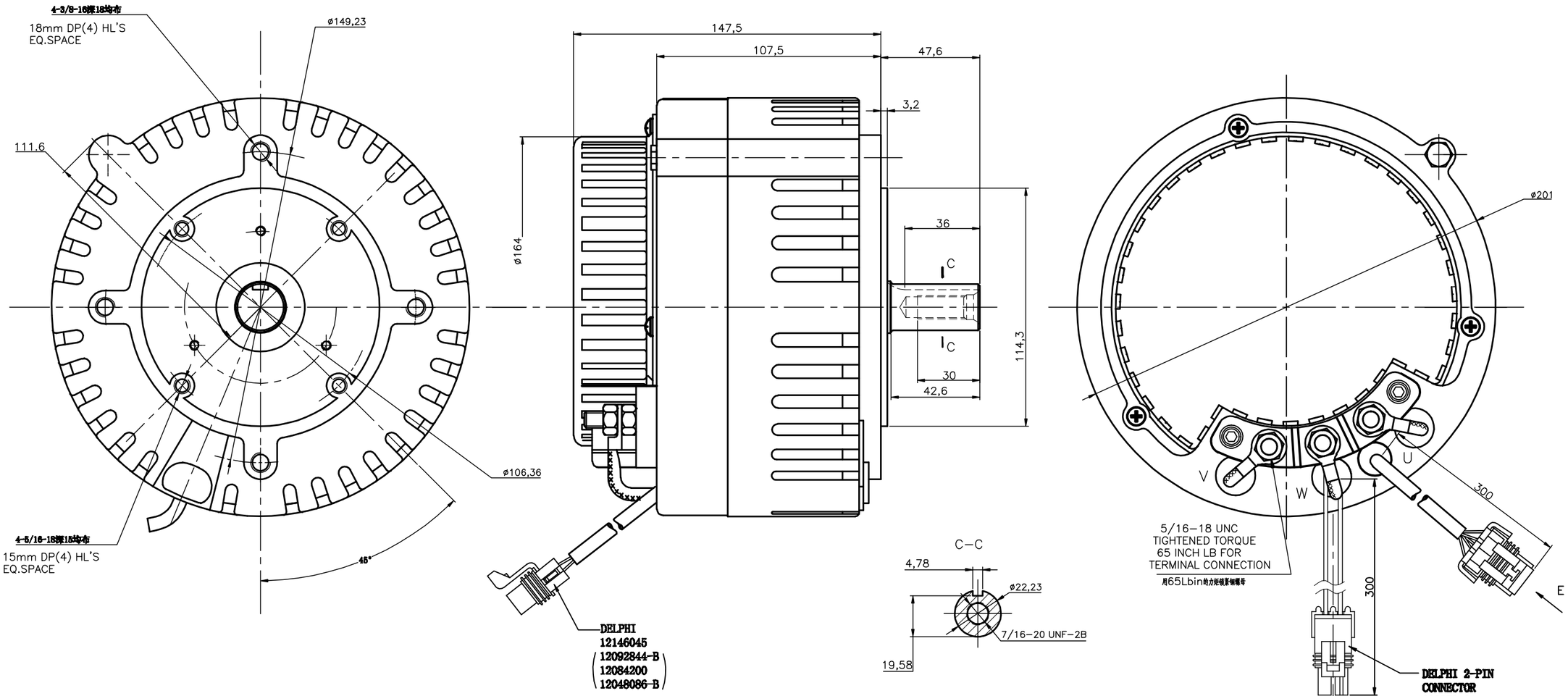

NOTES:
1.CCW FAN
2.TURNS IS 28 PER PHASE
3.Front bearing: NTN6006 LLUC3/5K (Made in Japan)
4.Product to be shipped in plain white box, styrofoam packaging
Include Dyno Plot of namecard for each motor.
5.Box to be marked:
Part Number: ME0201014201 REV-A
Made in China
6.Ic Temperature Sensor KTY84-130 Installed In Windings.

NAMECARD DATA
PART # ME0201014201 REV-A
DATE CODE XXXXXX
SERIAL #:XX.XX.XXXX
Mars Electric LLC
Milwaukee, WI USA

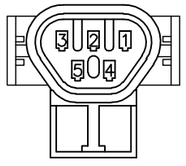

VIEW E
SCALE 2:1

PIN LOCATION 插孔点	WIRE DESIGNATION 导线标记	WIRE COLOR 导线颜色	REMARKS 注意
1	S1 (U1)	WHITE白	--
2	S2 (U2)	GREEN绿	--
3	S3 (U3)	BLUE蓝	--
4	GND (0)	BLACK黑	SHIELD TIED TO THIS PIN
5	V_{DD} (+12)	RED红	--

REV.	CHANGES	BY	ECO NO.	DATE
A	ADDED_TEMPERATURE_SENSOR	LXP	-	10.01.26
-	-	-	-	-
-	-	-	-	-
-	-	-	-	-
-	-	-	-	-
-	-	-	-	-
-	-	-	-	-

DO NOT SCALE DRAWING
THIS DRAWING IS PROPRIETARY PROPERTY OF MARS ELECTRIC LLC CORPORATION DISCLOSED IN CONFIDENCE, WHICH MAY NOT BE USED OR DISCLOSED WITHOUT PERMISSION. RETURN PROMPTLY AFTER USE.

DIMENSIONING AND TOLERANCING PER ANSI Y14.5M-1994

CLASSIFICATION OF CHARACTERISTICS
CRITICAL (C):
EMMISIONS (E):
MAJOR (M):

MATERIAL

S/N: CODE:
MODEL NO:
SIM TO:

TITLE OUTLINE
8BL1200-28T13
永磁式无刷直流盘式电动机
外 形 图

DRAWN: LXP 10.01.26
APPR:
DEPT:
SCALE: -

Mars Electric LLC
MILWAUKEE, WISCONSIN, U.S.A.
-
DESIGN VENDOR: -
ME0201014201
0JWT. 301. 246
REV A | SHEET 1 OF 1